Attachment 1

GRAD and STREGE RESIDENCE

Located at: 12921 Villa Rose Drive, Santa Ana, CA

BACKYARD RENOVATION

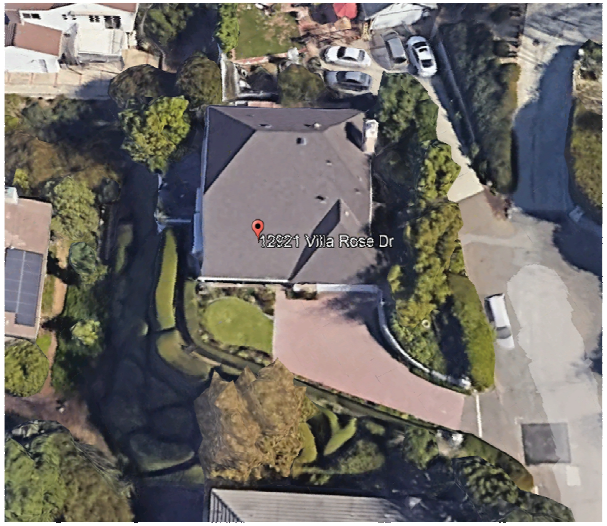

SITE AERIAL PHOTO

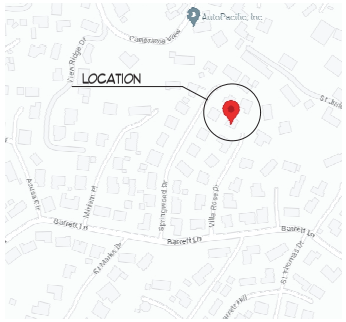

LOCATION MAP

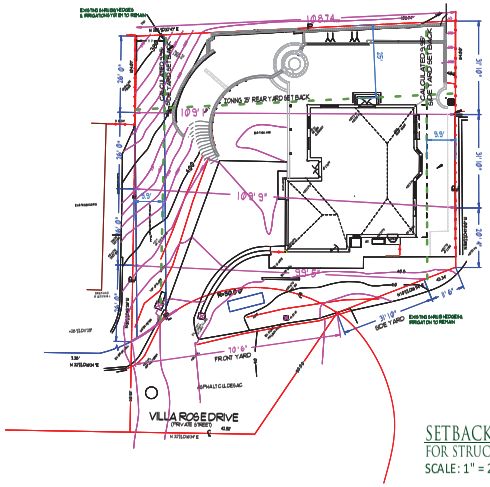

SETBACK CALCULATION MAP
FOR STRUCTURES OVER 12'
SCALE: 1" = 20'

PROJECT SCOPE

Discretionary Approval Request
For s Site Development Permit
as SECTION 7-9-64 f2 allows
For walls between 6' and 8' tall within required rear and side yard setback areas. Walls include:
- 51' long retaining wall 7' to 8' tall near property line - screened by vines;
- 49' long retaining wall, 4' tall with 3 ½' barrier rail atop, screened by shrubs, and adjacent to new pat i q
- 29' long retaining wall up to 4 ½' tall, adjacent to PL with 3 ½' barrier rail atop;
- two (2) terraced radius retaining walls up to 7 ½' tall with lengths 15' 5" and 17' 9".

LEGAL DESCRIPTION

LOT 6 OF TRACT No. 7598 in
MISCELLANEOUS MAPS
BOOK 359 PAGES 31 & 32

ACCESSOR'S PARCEL NUMBER

393-061-45

ZONING: **E4**

PROPERTY ADDRESS

12921 VILLA ROSE DRIVE
SANTA ANA, CALIFORNIA

SPA PERMIT #
SWP 24-0031

RETAINING WALL PERMIT #
RWP 24-0003

GRADING PERMIT #

PLANNING PERMIT
PA 24-0028

SHEET INDEX

SURVEYOR
Architectural Survey w/ Structure to Property Line Dimensions

LANDSCAPE ARCHITECT
SD-1 Site Development Plan
SD- 2 Site Plan with Property Photo Diagram
L-1 Landscape Construction Plan/Staking
L-2 Elevation Landscape Back Yard Retaining walls
L-3 Landscape Construction Detail Concept - SPA/FENCING
L-4 Landscape Construction Detail Concept - RETAINING WALLS
L-5 Landscape Construction & Planting Notes
L-6 Landscape Planting Plan
L-7 Landscape Lighting Plan
Rear Yard Setback Calculations reference plan

STRUCTURAL - SEE RWP 24-003
S0 Spa/Walls Notes, Schedules, Legend
S1 Plan View (LAYOUT)
SGN Structural General Notes
SGN1 Structural General Details
SD1 Structural Details
SD2 Structural Details
SD3 Structural Details
SD4 Structural Details
SD5 Structural Details
SD6 Structural Details
Structural Calculat i ons package

CIVIL ENGINEER- SEE RWP 24-003
1/5 Precise Grading & Drainage Plan Title sheet w/NPDES Notes
2/5 Precise Grading Plan
3/5 Drain Plan
4/5 Wall Plan
5/5 Erosion Control Plan

PROJECT TEAM

OWNER / ADDRESS
Laura Grad & Robert Strege
12921 Villa Rose Dr.
Santa Ana, CA 92708
714.380.7090

CIVIL ENGINEER
ALAN R SHORT, P.E.
7263 West Galen Drive
Herriman, UT 84096
949.586.5200

LANDSCAPE ARCHITECT
ENVIRONMENT UNLIMITED, INC
Janet Eldridge
825 Fee Ana St.
Placent i a, CA 92870
714.524.2218

STRUCTURAL ENGINEER
AP ENGINEERING
Ken Kolodziej, PE
400 E. Esther Place
Placent i a, CA 92870
714.996.1219

GEOTHECHNICAL ENGINEER
COAST GEOTECHNICAL, INC
Todd Houseal
1200 W. Commonwealth Ave.
Fullerton, CA 92833
714.870.1211

ENVIRONMENT UNLIMITED, INC
825 Fee Ana St. Placentia, CA 92870
Service@Environment-Unlimited.com 714-524-2218
Landscape Design by: janet@environment-unlimited.com

GRAD & STREGE RESIDENCE
12921 VILLA ROSE DRIVE, SANTA ANA
ASSESSOR'S PARCEL No.: 393-061-4
LEGAL DESCRIPTION: Lot 6 of Tract No. 7598 in Miscellaneous Maps Book 359 pages 31 & 31

LANDSCAPE CONSTRUCTION TITLE SHEET SHEET INDEX

Date:
5/31/2024
Revision #:
#01: Simplify Site Plan, color code walls, additional photos

Sheet
T-1

Robert Strege & Laura Grad Residence
12921 Villa Rose Drive, Santa Ana
Assessor's Parcel No. 393-061-4

Landscape and Hardscape Renovation

Site Development Plan

Scope of Project

Request for Modification as Permited by Zoning Code Sec. 7-9-64 for WALLS BETWEEN 6' AND 8'

Per Zoning Code Sec 7-9-64 (I) Modifications and exceptions on rear yard wall heights provisions are permitted to allow for walls eighe (8) feet and under subject to the approval of Site Development Permit by the Director.

Due to the steep 18.5' high remain slope of the property's rearback yard directly outside of the residence, the Scope of Project includes construction of several terraced retaining walls to give owners space for an outdoor living area. The walls are within the 25' rear yard setback, and within is one of the 9.95' side yard setbacks of property.

The retaining walls, as measured from lowest soil level, range from 3.5' to 4.5' in height with a 3.5' barrier rail atop (indicated in blue), to solid 7' or 8' high block retaining walls (indicated in Orange).

- There is currently no fence or wall on the rear yard property line.
- There are 5' high chain-link and vinyl fencing on the side property lines.
- There is currently a small deck and tall hedged shrubs in the 25' rear yard setback and one of the 9.95' side yard setbacks where these proposed retaining walls are located.

Approval of these proposed block retaining walls six (6) to eighe (8) feet in height, and the combination of 3.5 to 4.5 foot retaining walls with a 3.5' barrier railing on top as shown on this Site Development plan should be granted under this code due to the following

1. The height and location of the walls as proposed will not result in or create a traffic hazard as it is not located adjacent to a road, street, alley or driveway.
2. The location, size and design of the proposed retaining walls will not create conditions that may be objectionable, detrimental or incompatible with other permitted uses in the vicinity. Several examples of similar retaining conditions within the surrounding community can be viewed from this property. In addition, the walls will be enhanced with plant material.

- Within the rear yard setback,
  - a) block retaining wall between 7' and 7.75' high is located along 51' of the 128.75' rear property line and is 5' from the rear property line to allow wall to be softened with plant material/vines.
  - b) 4.5' to 5.5' from the face of the above wall is a 4' high retaining block wall adjacent to the proposed patio with a 3.5' barrier rail atop wall. Screening plant material will be between these two walls to soften the walls.
    - These two walls extend 6' into the 9.95' side yard setback.
  - c) A 4' high block retaining wall with a 3.5' barrier rail atop is located directly adjacent to the rear property line and is 28' long
  - e) Two additional radius retaining walls with heights ranging from 4 to 7.5' high are also located within the 25' rear yard setback to create terraces for fruit trees and a vegetable garden. These walls measure 15'-5" and 17.75' long

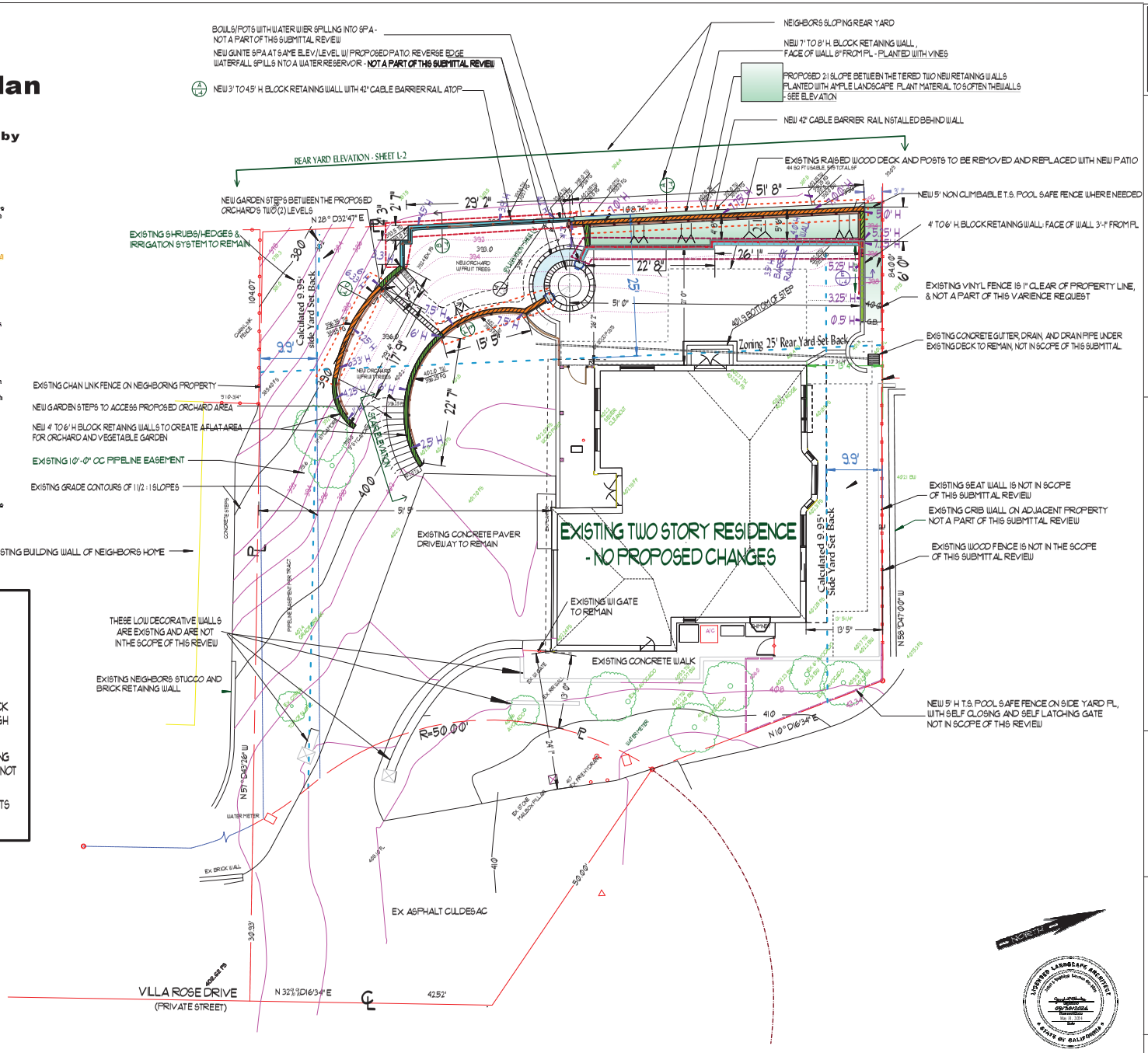

WALL LEGEND
(For Retaining Walls within Rear and/or Side Yard Setback)

- ORANGE WALL WITH HATCH DEPICTS RETAINING BLOCK WALLS BETWEEN 6' & 8'
- BLUE WALL WITH HATCH DEPICTS BLOCK RETAINING WALLS BETWEEN 3' & 4.5' HIGH WITH A 42" BARRIER RAIL ATOP
- GREEN WALL WITH HATCH DEPICTS RETAINING WALLS AT OR LESS THAN 6' TALL WHICH ARE NOT IN THE SCOPE OF THIS REVIEW
- EXISTING GARDEN WALLS OF VARIOUS HEIGHTS NOT IN THE SCOPE OF THIS REVIEW

Base/Plot Plan information is derived from
"ARCHITECTURAL SURVEY"
prepared by:
Sillas Land Surveying
1644 N. Avon Street
Burbank, CA 91505

LOT AREA
LOT is 10,040 Square Feet, 0.23 Acres
Foundation of home occupys
aproximately 2,150 Square Feet
Existing Driveway occupys
aproximately 1,260 Square Feet

ENVIRONMENT UNLIMITED, INC
825 Fee Ana St. Placentia, CA 92870
Service@Environment-Unlimited.com 714-524-2218
Landscape Design by: janet@environment-unlimited.com

GRAD & STREGE RESIDENCE
12921 VILLA ROSE DRIVE, SANTA ANA
ASSESSOR'S PARCEL No.: 393-061-45
LEGAL DESCRIPTION: Lot 6 of Tract No. 7896 in Miscellaneous Maps Book 359 page 31 & 31

Site Development Plan:
Scale: 1/8" = 1'

Date: 6/1/2024
Revision #:
01 Color code walls and ID Wall Heights

Sheet SD - 1

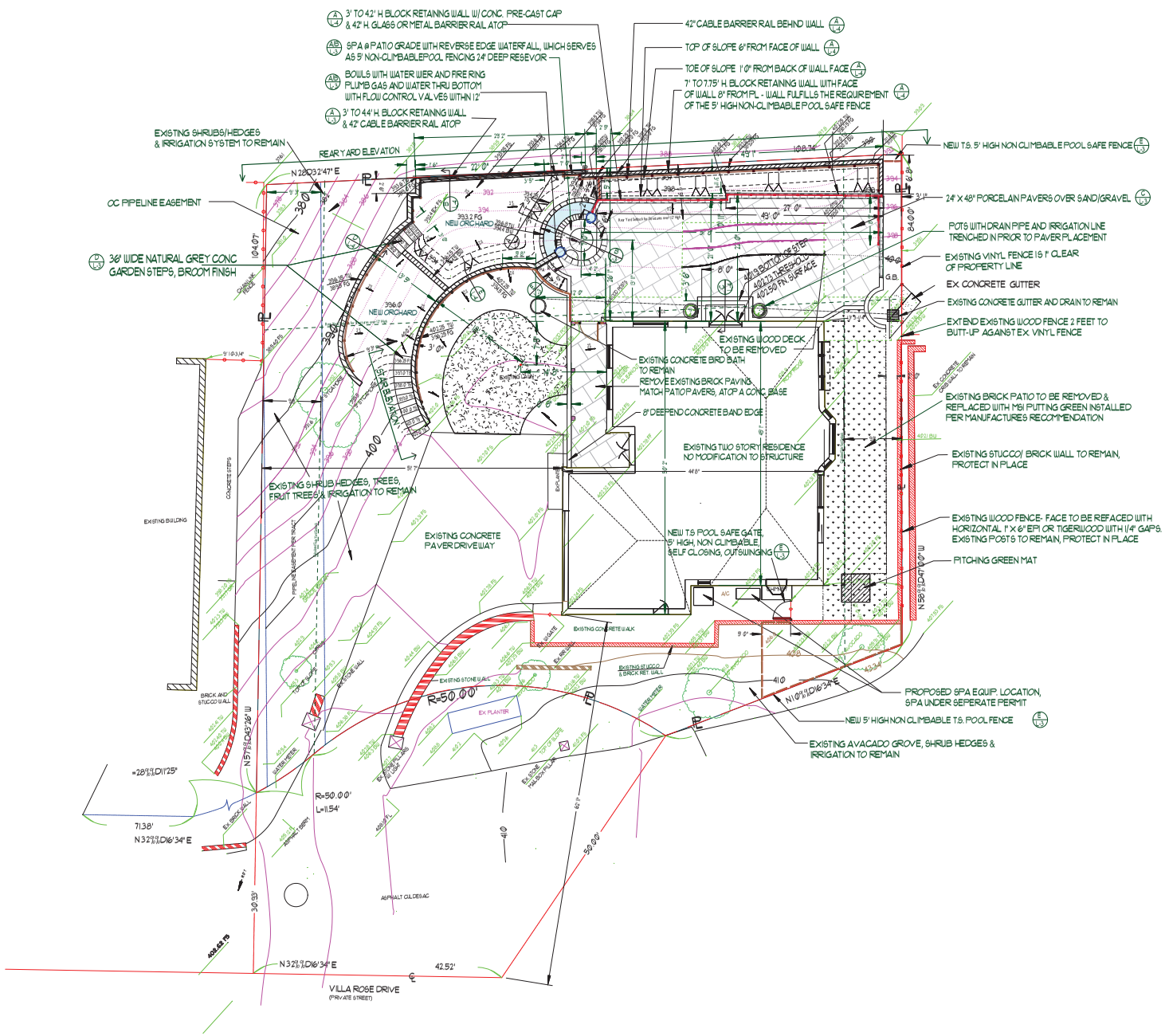

Per Civil Grading Plan:
ESTIMATED EARTHWORK:
CUT: 30 CY
FILL: 215 CY

ENVIRONMENT UNLIMITED, INC
825 Fee Ana St. Placentia, CA 92870
Service@Environment-Unlimited.com 714-524-2218
Landscape Design by: janet@environment-unlimited.com

GRAD & STREGE RESIDENCE

12921 VILLA ROSE DRIVE, SANTA ANA
ASSESSOR'S PARCEL No.: 393-061-45

LEGAL DESCRIPTION: Lot 6 of Tract No. 7596 in Miscellaneous Maps Book 359 pages 31 & 31

Landscape Construction Plan:
Scale: 1/8" = 1'

Date: 5/20/2024
Revision #:

Sheet L - 1

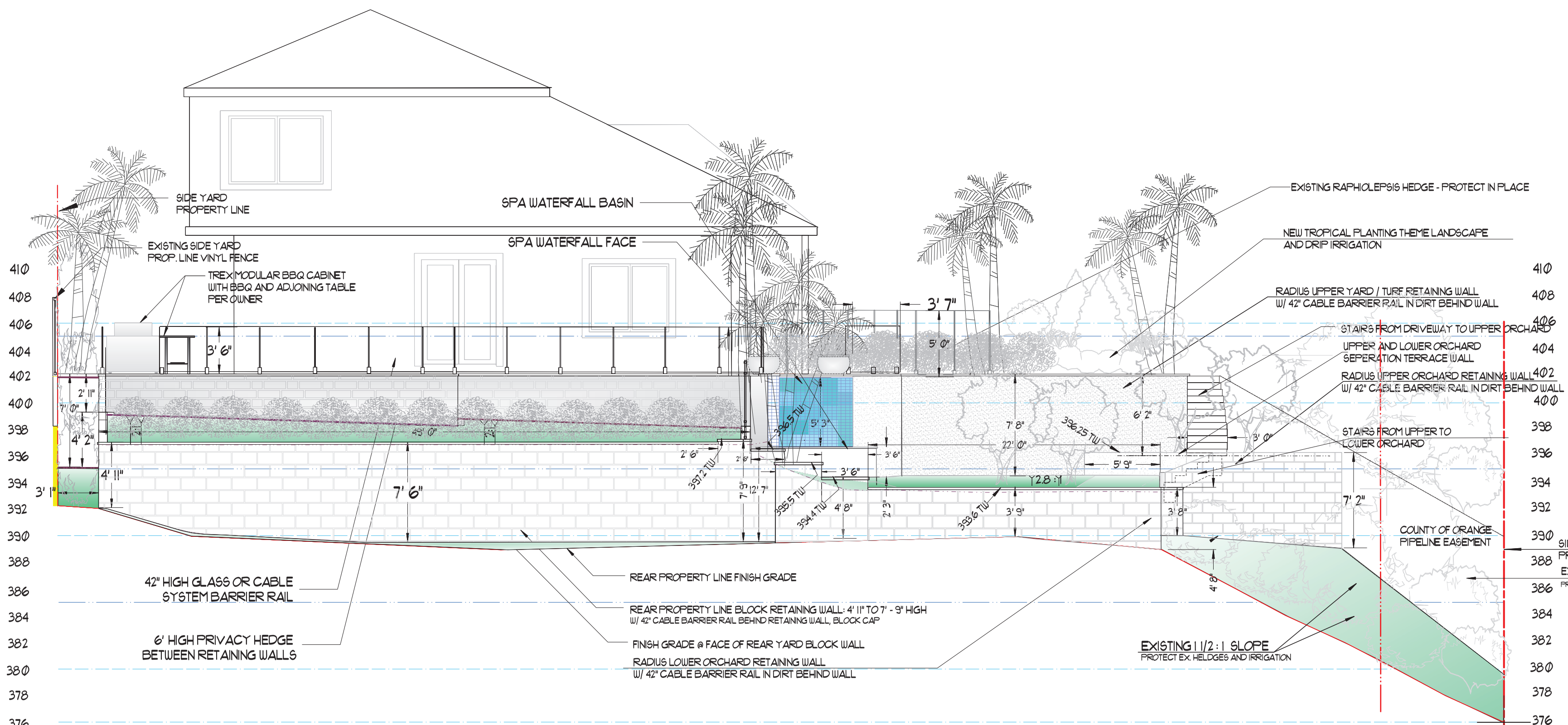

REAR YARD PROPERTY LINE ELEVATION

SCALE: 1/4: = 1' - 0"

ENVIRONMENT UNLIMITED, INC
825 Fee Ana St. Placentia, CA 92870
Service@Environment-Unlimited.com 714-524-2218
Landscape Design by: janet@environment-unlimited.com

GRAD & STREGE RESIDENCE
12921 VILLA ROSE DRIVE, SANTA ANA
ASSESSOR'S PARCEL No.: 393-061-45
LEGAL DESCRIPTION: Lot 6 of Tract No. 7598 in Miscellaneous Maps Book 359 pages 31 & 31

Landscape
Rear Yard
Elevation
Scale: 1/4" = 1'

Date:
2/9/2024
Revision #:

Sheet L - 2

INFORMATION ON THIS PAGE PROVIDES A VISUAL CONCEPT OF SITE IMPROVEMENTS. REFER TO AP ENGINEER STRUCTURAL ENGINEERING PLANS AND DOCUMENTS AND ALAN R SHORT PRECISE GRADING PLANS FOR CONSTRUCTION REQUIREMENTS

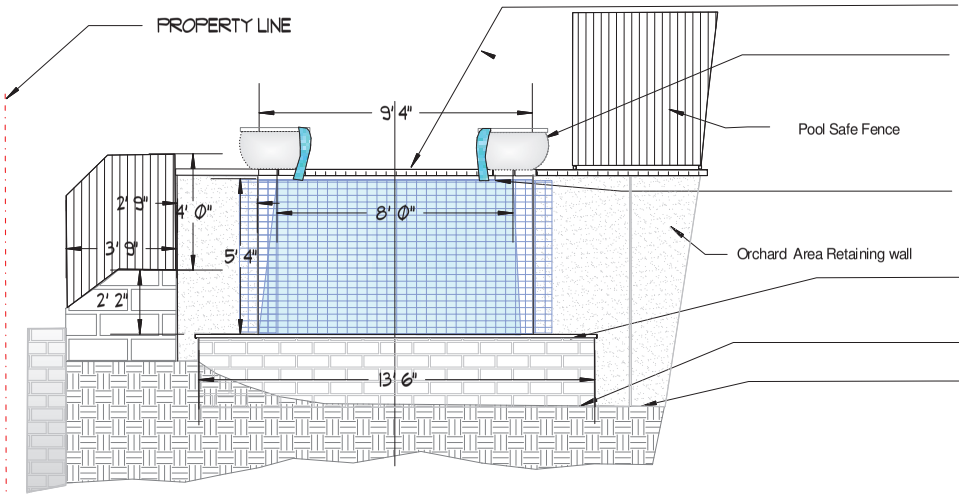

A Rear Yard Patio Jetted Spa Elevation

SCALE: 1/2" = 1' - 0"

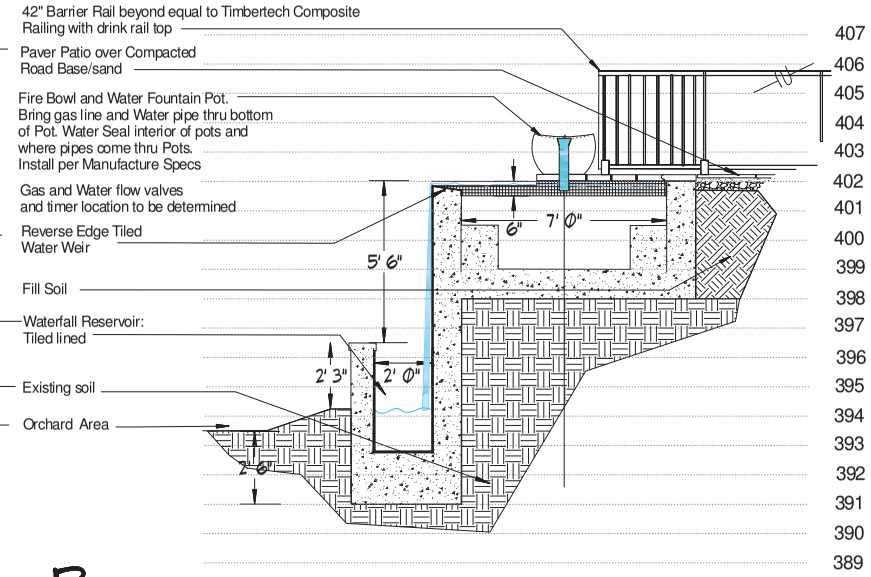

B Rear Yard Patio Jetted Spa Cross Section

SCALE: 1/2" = 1' - 0"

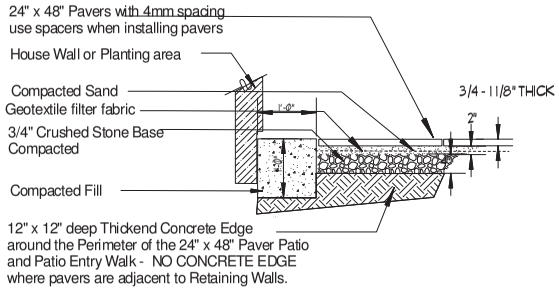

C Rear Yard Patio Thickened Concrete Band Perimeter (Except at Retaining Walls)

SCALE: 1" = 1' - 0"

Section

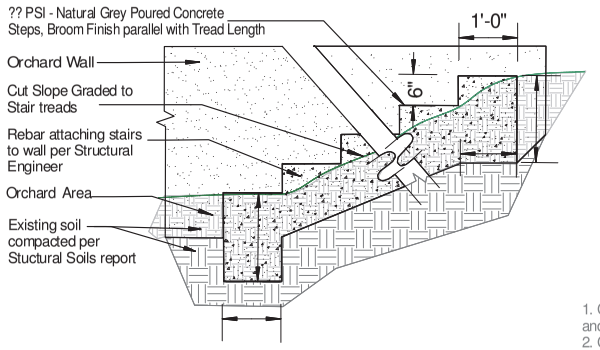

D Concrete Steps adjacent to Orchard Walls

SCALE: 1" = 1' - 0"

Section

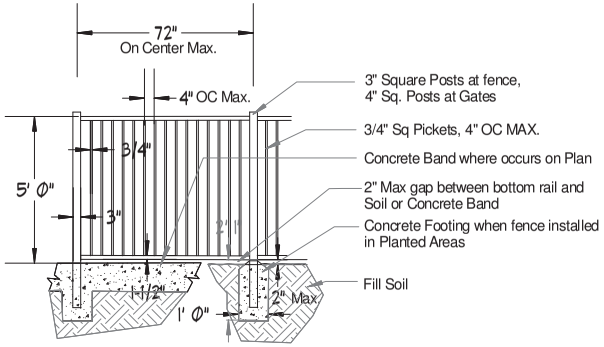

1. Contractor to provide Shop Drawings for all fence components and Pool Safe outswing gates.
2. Contractor shall be responsible for structural design of gates.
3. All Metal surfaces powder coated and Rust Resistant including welds. Color to be Flat Black or as directed by owner. Contractor to submit color sample as required.
4. Contractor shall apply continuous welds along all edges of fence members and grind all Welds smooth.
5. All Tubular Steel posts, rails, and pickets shall be flush and free of all dents, spurs, and sharp edges and shall be installed level, plumb and square.

E Tubular Steel Fence

SCALE: 1/2" = 1' - 0"

ENVIRONMENT UNLIMITED, INC
825 Fee Ana St. Placentia, CA 92870
Service@Environment-Unlimited.com 714-524-2218
Landscape Design by: janet@environment-unlimited.com

GRAD & STREGE RESIDENCE
12921 VILLA ROSE DRIVE, SANTA ANA
ASSESSOR'S PARCEL No.: 393-061-45

LEGAL DESCRIPTION: Lot 6 of Tract No. 7599 in Miscellaneous Maps Book 359 pages 31 & 31

Landscape Construction
SPA & FENCE
Concept Details
Scale: 1/2" = 1'

Date: 5/20/2024
Revision #:

Sheet L-3

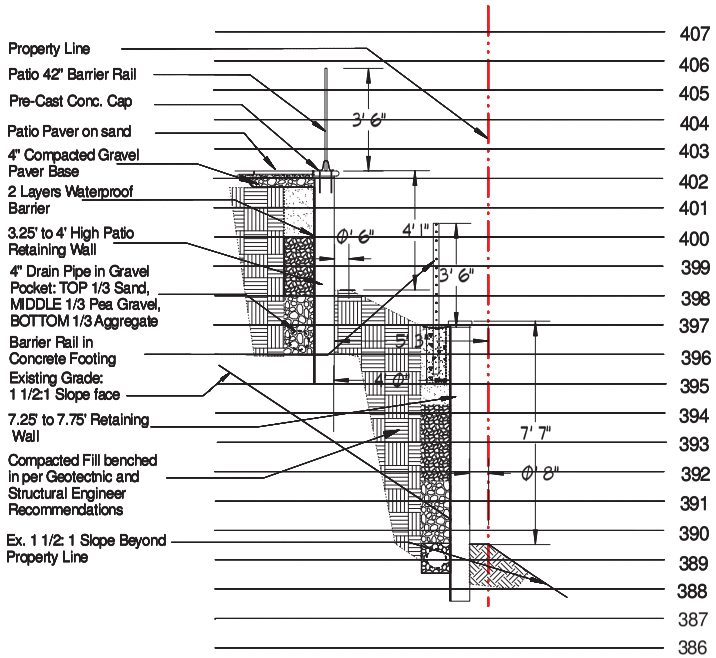

A Rear Yard at New Patio Property Line Retaining Walls Section

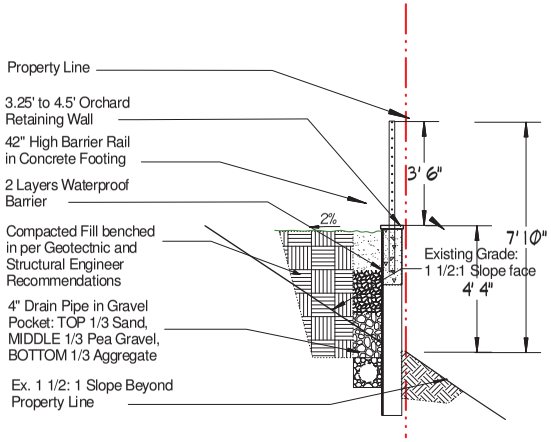

B Rear Yard at Lower Orchard Property Line Retaining Wall Section

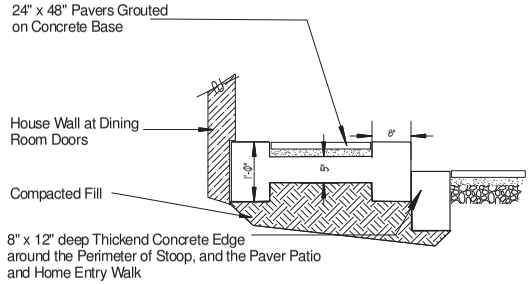

C Rear Yard Patio Stoop

SCALE: 1" = 1' - 0"

Section

INFORMATION ON THIS PAGE PROVIDES A VISUAL CONCEPT OF SITE IMPROVEMENTS.
REFER TO AP ENGINEER STRUCTURAL ENGINEERING PLANS AND DOCUMENTS
AND ALAN R SHORT PRICISE GRADING PLANS FOR CONSTRUCTION REQUIREMENTS

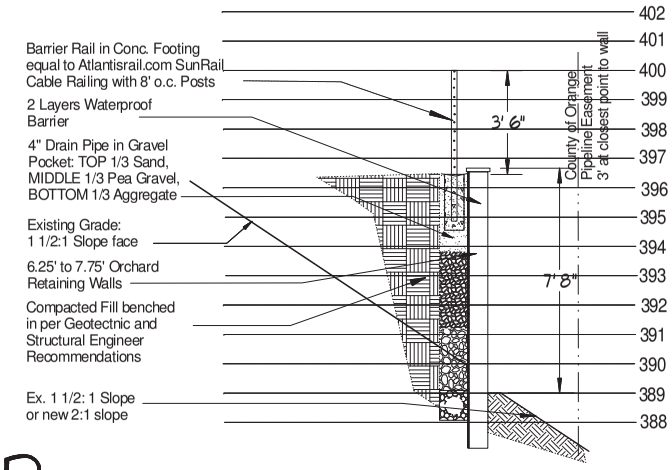

D Ochard Retaining Walls at Down Slope Section

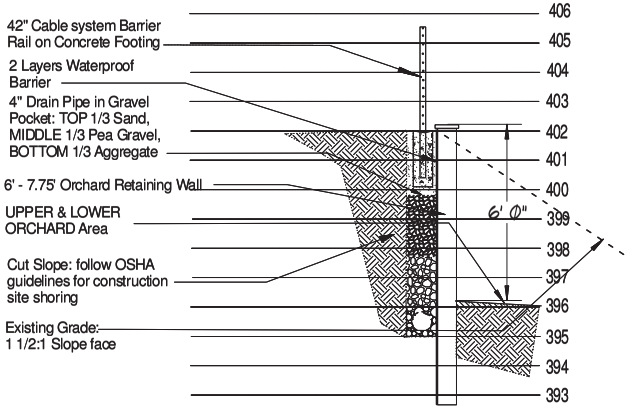

E Ochard Retaining Walls Section

ENVIRONMENT UNLIMITED, INC
825 Fee Ana St. Placentia, CA 92870
Service@Environment-Unlimited.com 714-524-2128
Landscape Design by: jamie@environment-unlimited.com

GRAD & STREGE RESIDENCE
12921 VILLA ROSE DRIVE, SANTA ANA
ASSESSOR'S PARCEL No.: 393-081-45
LEGAL DESCRIPTION: Lot 6 of Tract No. 7598 in Miscellaneous Maps Book 359 pages 31 & 31

Landscape Construction WALLS
Concept Details
Scale: 1/2" = 1'

Date: 2/19/2024
Revision #:

Sheet L - 4

CONSTRUCTION NOTES

I. CONTRACTOR'S CONSTRUCTION WORK RESPONSIBILITIES:

A. Contractor shall provide all labor, materials, transportation and services required to install all construction and landscape elements as shown on the drawings and specified herein. Contractor shall refer to all documents and discuss any discrepancies among documents with owner. Documents include Architectural Survey prepared by Sillas Land Survey, Structural Engineering Plans, Notes and Structural Details prepared by AP Engineering, Geotechnical Engineering Investigation of Proposed Rear Yard Retaining Walls and Spa prepared by Coast Geotechnical, Inc, Grading and Drainage Plans and Details prepared by Alan R Short PE, and Backyard Renovation Landscape Plans prepared by Environment Unlimited, Inc.

B. Contractor shall perform work in conformance with all applicable local, county and/or state codes, regulations and rules.

C. All work shall be performed by California licensed contractors. The contractors and subs shall carry all workman's compensation, public liability and property damage insurance as required by all applicable codes, regulations and by the owner.

D. The contractor shall obtain, coordinate and pay for any and all permits, fees and agency inspections as required unless owner directs otherwise.

E. The contractor shall verify all site conditions and dimensions as shown on plans prior to commencement of work. All discrepancies shall be reported to the owner immediately.

F. All elements delineated on plans shall be staked or marked for owner approval prior to installation. The contractor shall be responsible for any encroachment onto adjacent property, right-of-ways, easements, set-backs or any other legal property restrictions either marked or unmarked.

G. The contractor shall be responsible for coordination of his activities with all other trades through the owner.

H. The contractor shall be liable for damage to all utilities, construction, irrigation and planting elements, existing or new, marked or unmarked, and shall repair or replace any damaged improvements in a manner acceptable to the owner.

I. The contractor shall be liable for any loss to his equipment, parts and materials until completion and acceptance of the job in writing by the owner.

J. The contractor shall be responsible for finish grade and drainage of all construction elements at specified gradient.

K. All work shall be guaranteed by the contractor as to the material and workmanship for a period of one year following the date of final acceptance of project. The contractor shall provide a written guarantee on his letterhead at the time of the final inspection.

L. The contractor shall provide a written certification that the construction work is installed in full compliance with the contract documents. Any approved substitutions or deviations from the plans shall be noted. This certification shall be on the contractor's letterhead with his signature and California Contractor's license number.

M. The Contractor shall be responsible for determining/confirming property lines, right-of-ways, tract boundaries, grades, easements, utility locations (above and below grade) any other legal or physical elements, as required, for the successful completion of the work. Contractor shall not be permitted to proceed with any work without determination of the above information.

II. OWNER'S CONSTRUCTION WORK RESPONSIBILITIES:

A. The owner will be directly responsible for all aspects of construction including all construction inspections required by Coast Geotechnical Soils Engineer, AP Engineering Structural Engineer, and Alan R Short Civil Engineer. Owner shall perform periodic inspections during construction to insure conformance with the plans and specifications.

B. All questions relating to interpretation of the drawings and specifications, quality of work and acceptable fulfillment of intent of the contract documents shall be decided by the owner and Landscape Architect.

III. SCOPE OF LANDSCAPE CONSTRUCTION:

A. Base Sheets were derived from plans:
Prepared By: Sillas Land Survey
Titled: Architectural Survey
Dated: No Date Revised: Not Revised
Copies available from owner upon request.

B. The structural soils report utilized in the preparation of the construction plans and details was prepared by: Coast Geotechnical, Inc
Titled: Geotechnical Engineering Investigation of Proposed Rear Yard Retaining Walls and Spa
Dated: September 27, 2023
Copies available from owner upon request.

C. The Structural Details and notes for constructions of hardscape are prepared by: AP Engineering
Titled: Structural Calculations for Grad-Stege ResidenceSpaWalls and ten (10) Sheets of Structrual Notes, Schedules, Legends and Details
Dated: November 30, 2023
Copies available from owner upon request.

D CONCRETE AND MASONRY NOTES:

1. The concrete contractor shall be a C-8 California licensed concrete contractor. The masonry contractor shall be a C-29 California licensed masonry contractor.
2. All construction and workmanship shall conform to the current edition of The Uniform Building Code.
3. Contractor shall verify all dimensions and site conditions before starting work. Owner and landscape architect shall be notified of any discrepancies as well as any discrepancies between the plans, details and notes.
4. The following notes and typical details reference apply to all drawings unless noted otherwise.
5. The Landscape Construction contract drawings and specifications represent the finished structure concept. Unless otherwise shown, they do not indicate the method of construction. The contractor shall refer to Structural Engineering Documents for all Construction, supervise and direct the work and shall be solely responsible for all construction means, methods, techniques, sequences and procedures.
6. All existing fill soil and disturbed natural soils are to be excavated and replaced with properly compacted fill per the Geotechnical Engineering Investigation.
7. All pipe sleeving for drainage, irrigation and electrical service, beneath or embedded in concrete or masonry walls shall be coordinated with the appropriate subcontractors through the owner and approved by the owner.
8. All cement, aggregate, reinforcing steel, structural steel, etc. shall be from tested stock. Copies of the test reports shall be furnished to the owner upon request.
9. Footings shall be of the size and type as indicated on the Structural Engineering drawings or as required by a structural engineer.
10. Masonry contractor shall be responsible for backfilling all walls to grades per plan. finish grading for runoff swale behind all walls, perforated drain lines complete, waterproofing all walls below grade and all excavation necessary for the execution of masonry work.
11. All retaining walls shall be adequately shored during the backfill operation.All plaster finishes and colors shall match reference architecture or as directed by owner. Apply a sample area finish plaster coat of 4'X4' for owner approval prior to proceeding with balance of plaster work. Plaster textures to match finish on buildings in appearance and color. Verify with owner for plaster color and finish.
12. Apply non-yellowing water sealer to all plaster surfaces as approved by the owner.
13. Provide the owner with a 2'X2' sample of all concrete finishes as noted on these plans. Samples shall be approved by the owner prior to pouring flat work.
14. All concrete flatwork shall be a minimum of 4" thick unless otherwise indicated thicker. Nose all edges as shown on the details.
15. All concrete flat work shall slope to drain at a minimum of 2% in the direction of site drainage as indicated on the construction.
16. Concrete constructed from these plans shall meet all existing walks, driveways, concrete decks and pads, and tops of curbs, etc. flush.
17. Expansion joint spacing in concrete walks occur at all changes in direction and shall not exceed a maximum spacing of 10' on center. Expansion joint material shall be approved by the owner.

E METAL WORK NOTES:

1. The contractor shall notify the owner and landscape architect of any discrepancies between the plans, details and notes.
2. All construction and workmanship shall conform to the current edition of the uniform building code.
3. All steel tubing shall be ASTM 500 grade A or ASTM A501 seamless.
4. All fencing as shown on the plans and details is intended to meet the minimum state and local codes for pool safe fencing. All conditions that do not conform shall be brought to the owner.
5. To touch up galvanized surfaces use 'All State' 321 galvanizing powder (30% tin, 30% zinc, 40% lead and flux) as manufactured by 'All State' welding alloys company or equal.
6. Miscellaneous metal work shall be free of defects which impair strength, durability and appearance.
7. Erect plumb, straight, true and accurately fix in place, brace, reinforce, and anchor in place. Grind all field welds smooth.
8. Set railing standards true and plumb in properly positioned sleeves, them brace to position and cement in place with quick setting cement.
9. Protect all dissimilar metals from galvanic corrosion by pressure tapes, coating or isolators.
10. After erection, clean off all rust, scale and oil. Clean field welds, bolts and abraded areas. Touch up all areas with the same material as used for the shop coat leaving all surfaces ready to receive finish coats.
11. All galvanized metal shall be hot dipped galvanized.
12. Apply one (1) primer coat per note. (6) above and two (2) coats of exterior metal paint. Paint and paint color to be approved by the owner.

E. FOUNTAIN AND SPA NOTES:

1. The fountain and spa data contained on the Landscape Construction Plans, details and notes herein is for the purpose of specifying the finish physical appearance of these improvements. Refer the Structural Engineer Notes, Plans and Details
2. The contractor shall notify the owner and Landscape Architect of any discrepancies between the plans, details and notes.
3. The fountain/spa contractor shall be a C-53 California licensed swimming pool contractor.
4. The contractor shall provide shop and engineering drawings approved and designed by a California registered structural engineer, mechanical engineer, and electrical engineer for all aspects of a complete operable fountain and spa.
5. All construction and workmanship shall conform to the current edition of the uniform building and health codes.
6. All subgrade and foundation preparation shall conform to a structural soils investigation report provided by the owner.
7. The pool contractor shall carry all worker's compensation, public liability and property damage insurance as required by the owner.
8. The pool contractor shall verify all conditions and dimensions shown on the site prior to commencement of any work under this contract.
9. Pool contractor shall mastic seal between coping/cantilevered deck and bond beam on pool/spa.
10. Electrical shall be stubbed out in spa equipment area. All connections to equipment shall be by a pool contractor.
11. Contractor shall guarantee fountain and spa against all defects in material and workmanship for one (1) year from final acceptance by owner in writing.
12. Pool contractor shall be familiar with city, county, state and all applicable codes and submittals and shall provide all necessary pool engineering shop drawings to gain governing agency approvals and permits.
13. Pool contractor shall be responsible for all connections and equipment as required for a complete, operable fountain or spa.

LANDSCAPE SPECIFICATIONS

GENERAL NOTES:

1. The Landscape Contractor shall be responsible for conformance to all applicable City, County and State Codes, Regulations and Rules.
2. The Landscape Contractor shall be responsible for obtaining all required permits, paying required fees, and coordinating all required agency inspections unless owner directs otherwise.
3. The Landscape Contractor shall be responsible for verifying site limits, and will be liable for any encroachments onto adjacent property, right-of-ways, setbacks and easements.
4. The owner will be directly responsible for all aspects of construction, including all agency required landscape inspections.
5. All questions relating to be interpretation of the drawings and specifications, quality of work, and acceptable fulfillment of intent of the landscape planting and irrigation documents shall be decided by the Landscape Architect.

PLANTING SPECIFICATIONS:

1. The Landscape Contractor is recommended to performance a horticulture soil suitability test for recommendations for soil preparation, plant pit backfill mix, soil percolation, plant fertilization tablet/ratio, hydromulch components, and maintenance fertilization.
2. The Landscape Contractor shall remove all weeds, landscape installation debris, etc., from job site and dispose of off-site in a lawful manner prior to beginning work.
3. The Landscape Contractor shall establish finish grade 6 inches below finish floor of the buildings.
4. All drainage in landscape areas shall flow away from the buildings and shall flow a minimum of 2%.
5. All finish grades, adjacent to walks and curbs shall be 1 inch below finish surface in turf areas and 2 inches below finish surface in groundcover shrub areas.
6. All groundcover indicated on the plans shall be planted with rooted cuttings from flats in staggered rows continuously under trees and shrubs at the spacing indicated on the plans.
7. All planting areas to receive groundcover from flats or turf shall receive soil preparation amendments as recommended by the Horticultural Suitability Report.
8. All vines and espaliers shall have the wood support stakes or trellis carefully removed without damaging plant or root ball. The vines and espaliers shall be attached to wood fences with galvanized nails or eye screws and heavy-duty vine ties. They shall be attached to masonry walls with adhesive type vine supports with silicone adhesive and heavy-duty vine ties.
9. The establishment maintenance period shall be for a period of time as directed by owner and shall include a minimum program of fertilization, weed removal, rodent control and mowing of turf.
10. All trees, 24 inch box and smaller, shall be double staked with 2 inch diameter treated lodge pole tree stakes 10 foot long set outside of root ball. Use 1 inch wide super ply ties or new ½ inch diameter green garden hose at two locations.

All trees larger than 24 inch box shall be triple guyed as approved by the governing agency. Wire a ½ inch diameter x 24 inch long white PVC pipe "flag" in place on each guy.

11. All plant pits shall be twice to root ball diameter and one and one-half times the root ball depth. Provide 4 inches diameter augured sump when required by the horticultural soil suitability tests. Amend and backfill as required. Top of root ball shall be 1 inch above finish surface. Provide a 3 inch high water retention basin. Rake out as directed by owner, prior to groundcover/turf installation.

ENVIRONMENT UNLIMITED, INC
825 Fee Ana St. Placentia, CA 92870
Service@Environment-Unlimited.com 714-524-2218
Landscape Design by: janet@environment-unlimited.com

GRAD & STREGE RESIDENCE
12921 VILLA ROSE DRIVE, SANTA ANA
ASS SSOR'S PARC L No: 393-061-4
LEGAL DESCRIPTION: Lot 6 of Tract No. 7598 in Miscellaneous Maps Book 359 pages 31 & 31

LANDSCAPE CONSTRUCTION & PLANTING NOTES

Date: 2/13/2024
Revision #:

Sheet L-5

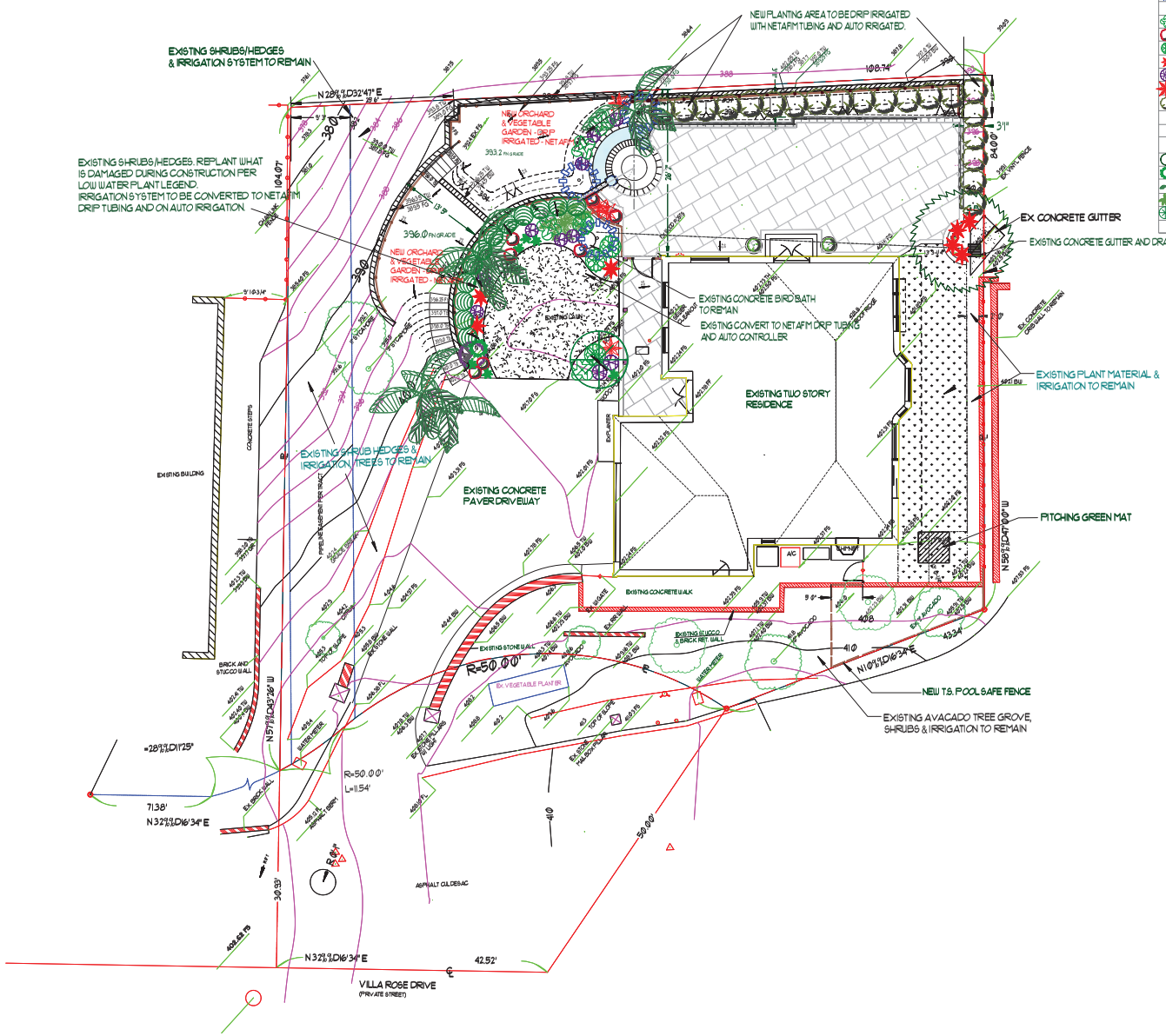

LEGEND

	BOTANICAL NAME	QTY	SIZE
SHRUB			
	DIANELLA VARIEGATA	14	1 GAL
	RAPHIOLEPSIS BALLERINA - POT EXISTING AND REPLANT BACK IN ORIGINAL LOCATION	12	
	YELLOW GINGER	3	5 GAL
	STRELITZIA REGINA YELLOW BIRD-OF-PARADISE	3	5 GAL
	GARDENIA VEITCHI	4	5 GAL
	EURYOPS ACRAEUS	7	5 GAL
	ABELIA KALEIDOSCOPE	4	3 GAL
	ANIGOZANTHOS BIG RED	4	5 GAL
	PHILODENDRON 'XANADU'	10	1 GAL
	GREVILLEA "COASTAL GEM"	7	5 GAL
	WESTRINGIA 'WYNY ABBIE GEM'	20	15 GAL
TREE, PALM			
	LIL CADO AVACADO	1	24" BOX
	CYCAS REVOLUTA, SAGO SINGLE TRUNK	1	15 GAL
	SEAFORTHIA ELEGANS MULTI TRUNK 36" BOX	3	36" BOX
	PHOENIX ROEBELENII MULTI	1	24" BOX
	PLUMERIA, LOW BRANCH	1	24" BOX

ENVIRONMENT UNLIMITED, INC
825 Fee Ana St. Placentia, CA 92870
Service@Environment-Unlimited.com 714-524-2218
Landscape Design by: janet@environment-unlimited.com

GRAD & STREGE RESIDENCE

12921 VILLA ROSE DRIVE, SANTA ANA
ASSESSOR'S PARCEL No.: 393-061-45

LEGAL DESCRIPTION: Lot 6 of Tract No. 7898 in Miscellaneous Maps Book 359 pages 31 & 31

Planting Plan
Scale: 1/8" = 1'

Date: 6/1/2024
Revision #:

Sheet L-6

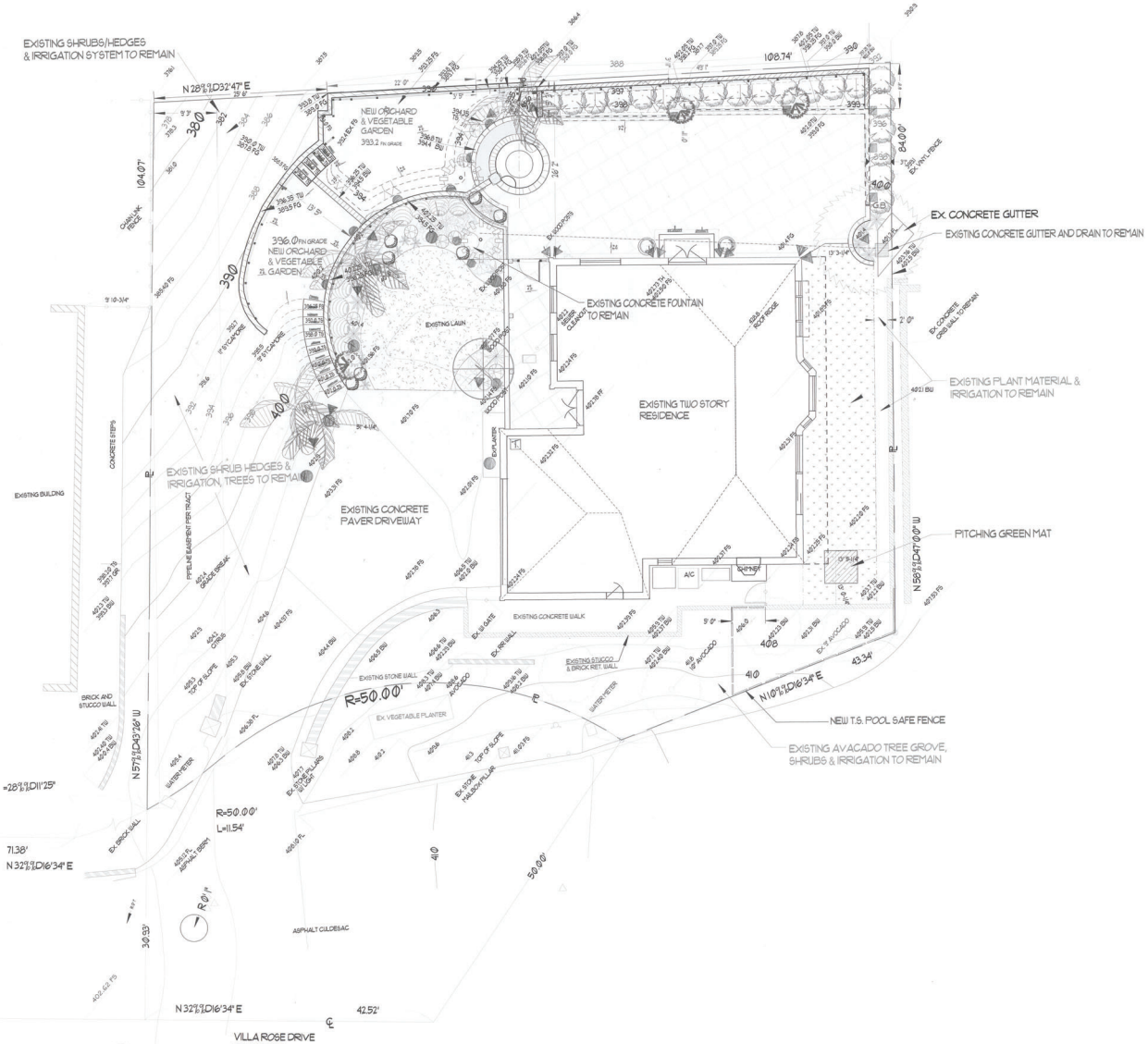

LOW VOLTAGE LIGHT - CORONA LIGHTING
STEP LIGHT CL-2408GM
UP LIGHT CL-5328GM
PATH LIGHT CL-6498 GM
OVAL LIGHT CL-5328 GM
STEP LIGHT CL-3358 GM
DOWN LIGHT CL-5328 GM
STEP LIGHT CL-352 GM
UPLIGHT MINI BULLET CL-1118 GM
TRANSFORMER 600W TOP STAINLESS STEEL

NOTES:

1. LIGHT LOCATIONS APPROXIMATE - ADJUST IN FIELD AS NEEDED!!
2. POWER TO OUTLET BY OWNER

ENVIRONMENT UNLIMITED, INC
825 Fee Ana St, Placentia, CA 92870
Service@Environment-Unlimited.com 714-524-2218
Landscape Design by: janet@environment-unlimited.com

GRAD & STEGE RESIDENCE
12921 VILLA ROSE DRIVE, SANTA ANA
ASSESSOR'S PARCEL No.: 393-061-45
LEGAL DESCRIPTION: LOT 6 IN TRACT No. 7598 IN MISCELLANEOUS MAPS BOOK 359 PAGES 31 & 31

Planting & Lighting Plan:
Scale: 1/8" = 1'

Date: 1/16/2024
Revision #:

Sheet L-6

Robert Strege & Laura Grad Residence

Landscape and Hardscape Renovation

PRELIMINARY PLAN

CLIENT VISION

Clients desire to have a usuable property in which they can entertain, as well as decrease the scope of the arduous and costly task of maintaining hedges on the steep 1 1/2 : 1 slopes of the property.

DESIGN OBJECTIVE

1. Replace small deck in the back yard with a large outdoor living space that allows for
   a) Large portable barbecue with adjacent bar seating
   b) Dining area for table of at least eight (8) chairs
   c) Conversation seating area with a fire table
   d) Built in jetted spa overlooking the canyon views with a sunning area
   e) Eliminate need for continous deck maintence.

2. Create a flat area for an orchard of fruiting trees and vegetable garden plots

3. Design the side yard into a flexable space in which teens can gather and be entertained
   a) a putting green
   b) ability to use table tennis set
   c) ability to play a variety of games such as corn hole, ladders, portable horse shoes

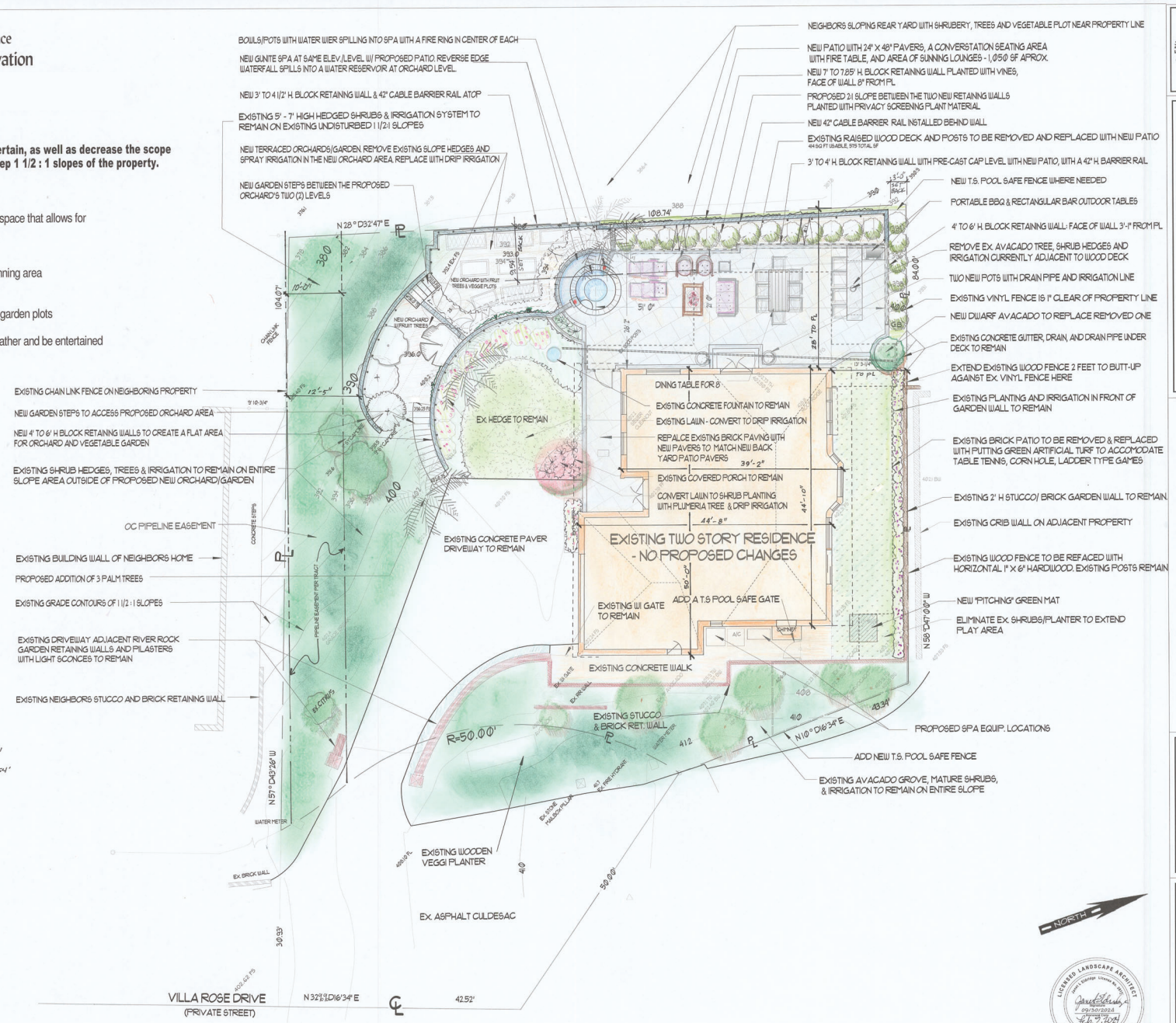

SIDEYARD SETBACK FOR STRUCTURES: 3'-0"
REAR YARD SETBACK FOR STRUCTURES: 9.54'
REFER TO SETBACK CALCULATION PLAN FOR MORE INFORMATION

Base/Plot Plan information is derived from
"ARCHITECTURAL SURVEY"
prepared by:
Sillas Land Surveying
1644 N. Avon Street
Burbank, CA 91505

LOT AREA
LOT is 10,040 Square Feet, 0.23 Acres
Foundation of home occupys
aproximately 2,150 Square Feet
Existing Driveway occupys
aproximately 1,260 Square Feet

ENVIRONMENT UNLIMITED, INC
825 Fee Ana St, Placentia, CA 92870
Service@Environment-Unlimited.com 714-524-2218
Landscape Design by: janet@environment-unlimited.com

GRAD & STREGE RESIDENCE
12921 VILLA ROSE DRIVE, SANTA ANA
ASSESSOR'S PARCEL No.: 393-061-45

LEGAL DESCRIPTION: LOT 6 OF TRACT No. 7598 IN MISCELLANEOUS MAPS BOOK 359 PAGES 31 & 32

Site Development Plan:
Scale: 1/8" = 1'

Date: 2/8/2024
Revision #:

Sheet P-1

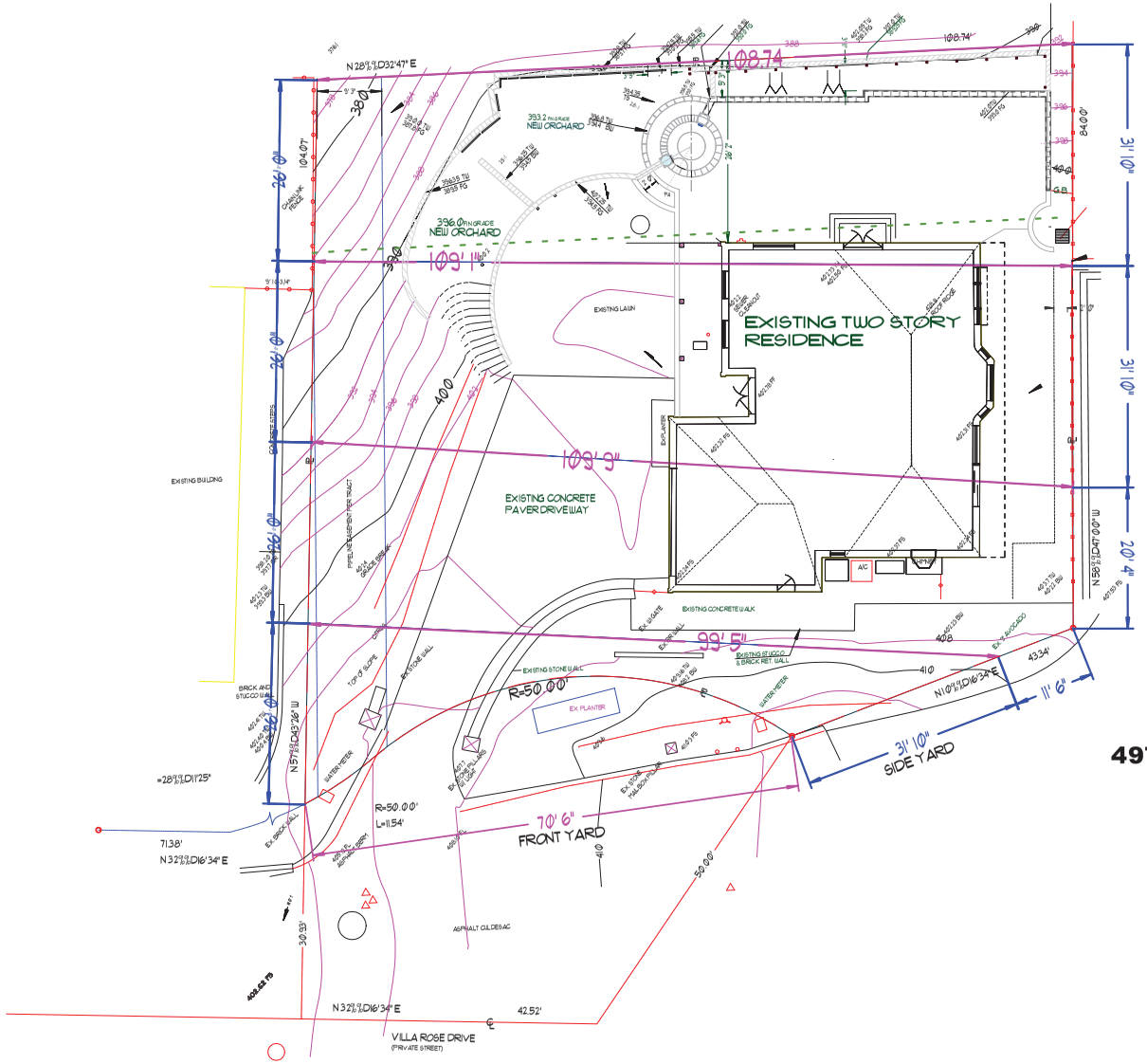

Lengths from West to East

108' 9"
109' 1"
109' 9"
99' 5"
70' 6"

497' 6" Divided by 5 measurements =
99' - 6" average
99.5' x (times) 10% = 9.95'

9.95' REAR YARD SETBACK FOR STRUCTURES OVER 12'

ENVIRONMENT UNLIMITED, INC
825 Fee Ana St. Placentia, CA 92870
Service@Environment-Unlimited.com 714-524-2218
Landscape Design by: janet@environment-unlimited.com

GRAD & STEGE RESIDENCE
12921 VILLA ROSE DRIVE, SANTA ANA
ASSESSOR'S PARCEL No.: 393-061-45
LEGAL DESCRIPTION: Lot 6 of Tract No. 7596 in Miscellaneous Map Book 350 pages 31 & 32

Rear Yard Setback Measurements and Calculation
Scale: 1/8" = 1'

Date: 5/31/2024
Revision #:

Sheet